PROJECT 26: Design and Analysis of True Single Phase Clock D Flip-Flop by using Cadence Virtuoso

A Comprehensive Study of Analog Circuits

By: Priya Chaudhary, Astitva Johri and Bhavya Solanki

Chapters:

List of Figures……..…… 3

1. Introduction …….. 4
2. Brief Description…… 5
3. Circuit Design……. 6-7
   3.1 Schematic Design……... 6
   3.2 Simulation Setup...…….. 6
   3.3 Transient Response……. 6-7
4. Simulation Results…….. 8
5. Advantages and Disadvantages…….. 9
   5.1 Advantages……. 9
   5.2 Disadvantages……. 9
6. Conclusion…….. 10
7. Frequently Asked Questions (FAQs)…….. 11

LIST OF FIGURES

Figure 3.1 Circuit of TSPC D Flip-Flop …….…….... 7

Figure 4.1 Simulation Results of TSPC D Flip-Flop ……... 8

1. INTRODUCTION

A True Single Phase Clock (TSPC) D Flip-Flop is a crucial component in modern digital circuit design, known for its efficiency and simplicity. Unlike traditional flip-flops that require both rising and falling edges of a clock signal, the TSPC D Flip-Flop operates with a single clock phase, thereby reducing clock skew and power dissipation. This characteristic makes it an ideal choice for high-speed and low-power applications.

The design and analysis of the TSPC D Flip-Flop using Cadence Virtuoso provide a robust framework for evaluating its performance in terms of speed, power consumption, and layout efficiency. By leveraging Cadence Virtuoso's advanced simulation tools, engineers can optimize transistor sizing, minimize leakage power, and ensure proper timing constraints. The tool’s capability to perform schematic design, layout, and simulation in a unified environment makes it an industry-standard platform for integrated circuit design.

Furthermore, the TSPC D Flip-Flop’s simplified clocking mechanism eliminates the need for additional clock buffers, which contributes to reduced area overhead and improved overall efficiency.

2. BRIEF DESCRIPTION

The TSPC D Flip-Flop is a key element in digital systems where power efficiency and speed are crucial. Unlike conventional flip-flops that require multiple clock phases, TSPC operates with a single-phase clock, significantly reducing dynamic power consumption and minimizing timing complexities. It is implemented using CMOS technology, with carefully sized transistors to optimize performance metrics such as propagation delay and power dissipation.

The design process in Cadence Virtuoso involves schematic capture, layout generation, and simulation using Spectre or other simulation tools. The layout is optimized to meet design rules, and verification techniques like Design Rule Checking (DRC) and Layout Versus Schematic (LVS) ensure the design's accuracy. Performance metrics such as setup time, hold time, and power efficiency are analyzed to fine-tune the design for practical applications.

TSPC D Flip-Flops find applications in clocked storage elements, high-speed data processing units, and low-power integrated circuits, making them highly valuable in modern VLSI design.

The TSPC D Flip-Flop is a crucial component in modern digital circuits, offering advantages in speed, power efficiency, and design simplicity. Its implementation in Cadence Virtuoso ensures precise analysis and optimization, making it suitable for integration into various VLSI applications. With careful design considerations, this flip-flop can achieve reliable and efficient performance in real-world scenarios.

3. CIRCUIT DESIGN

3.1 Schematic Design

- **Key Components:**
  - Transmission Gates: Composed of NMOS and PMOS transistors, controlled by clock signals.
  - Inverters: Used to invert the clock for proper timing.
  - Dynamic Storage Node: Holds the captured data.
  - Clock (CLK): A single-phase clock input.
  - D Input: The data input.
  - Q Output: The output that stores the data**.**
- **Operation:**
  - Data is passed through the transmission gate when the clock is high.
  - The data is latched and held when the clock is low, and the Q output follows the D input.

3.2 Simulation Setup

- **Simulation Type:** Transient Analysis.
- **Setup:**
  - Clock: A square wave signal (e.g., 1 GHz, 1ns period).
  - Input (D): Alternating between 0 and 1.
  - Time Step: Small time step (e.g., 1ps) for accurate transitions.
  - Monitor: Observe the Q output.

3.3 Transient Reaponse

- **Expected Behavior**:
  - **Q Output** follows **D Input** on the rising edge of the clock.
  - **Q Output** holds its value during the low phase of the clock.

- **Waveform**:
  - **Clock (CLK)**: Square wave.
  - **D Input**: Alternates between 0 and 1.
  - **Q Output**: Follows D during clock high, holds during clock low.

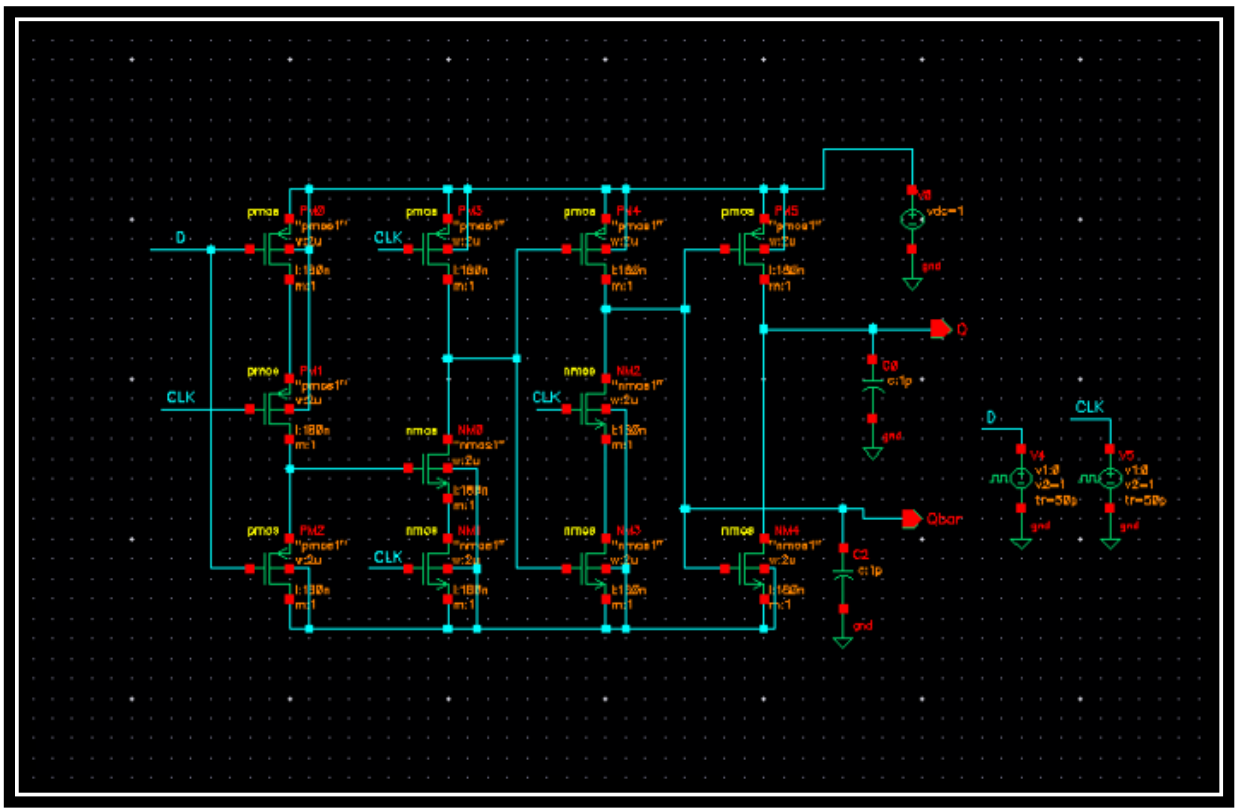

<u>Figure 3.1</u> Circuit of TSPC D Flip-Flop

4. SIMULATION RESULTS

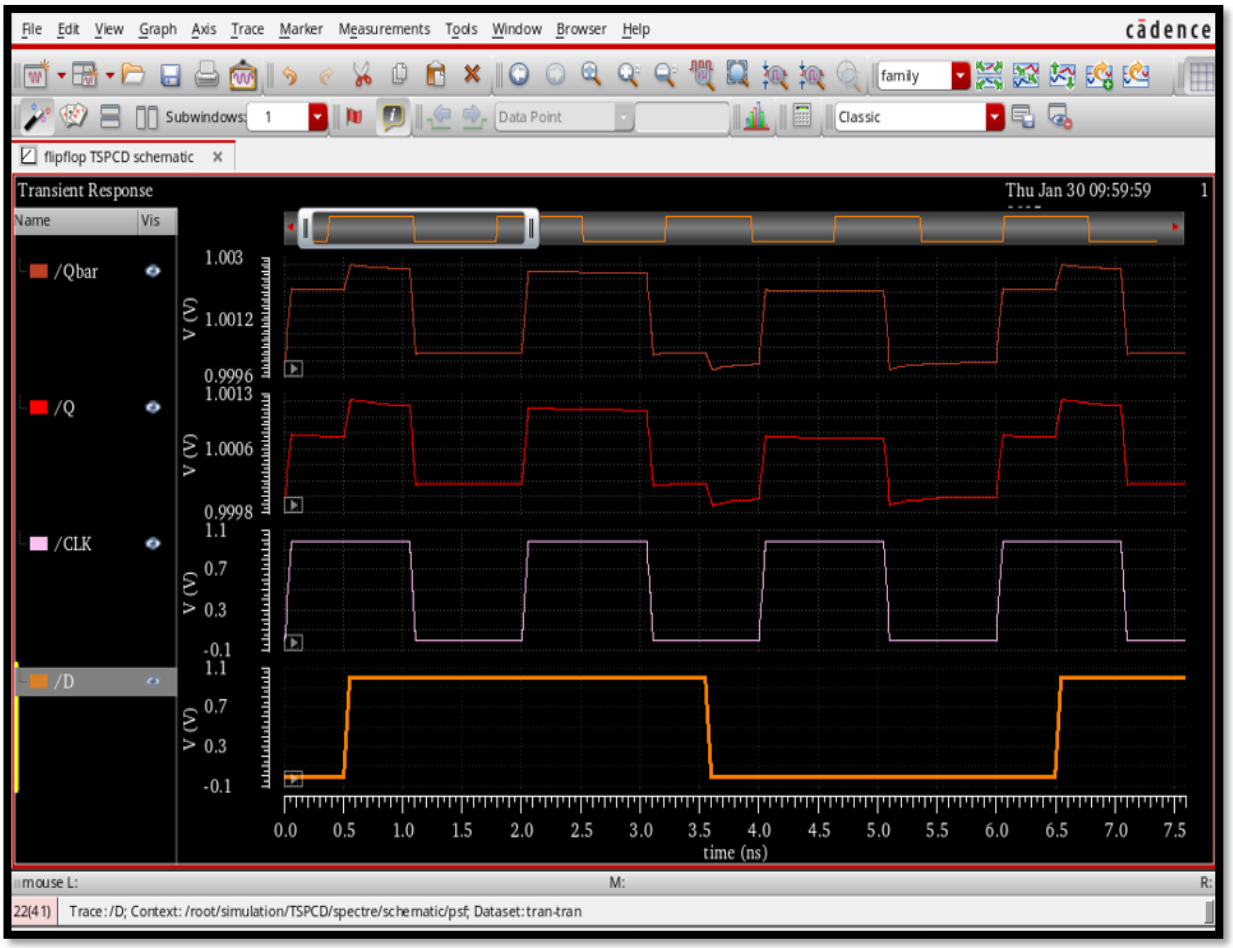

Figure 4.1: Simulation Results of TSPC D Flip-Flop

5. ADVANTAGES AND DISADVANTAGES

5.1 Advantages:-

1. **Low Power Consumption:** The use of a single-phase clock reduces clocking power.
2. **High Speed:** The elimination of clock skew and reduced transistor count contribute to faster operation.
3. **Simplified Clocking:** Unlike traditional flip-flops requiring both clock phases, TSPC operates with a single-phase clock, simplifying clock distribution.
4. **Compact Design:** Fewer transistors lead to reduced silicon area.

5.2 Disadvantages:-

1. **Higher Sensitivity to Process Variations:** Variations in CMOS fabrication can affect performance.
2. **Limited Drive Strength:** May require additional buffering in high-load applications.
3. **Increased Leakage Power:** In deep sub-micron technologies, leakage power might become significant.
4. **Setup and Hold Time Constraints:** Careful design is required to ensure proper timing margins.

6. CONCLUSION

The TSPC D Flip-Flop stands out as an efficient solution for high-speed and low-power digital circuits, primarily due to its single-phase clock operation. Through careful design and optimization in Cadence Virtuoso, designers can achieve an optimal balance between power efficiency, performance, and area constraints. The use of this tool enables accurate performance analysis, ensuring that the circuit meets stringent design requirements.

One of the major advantages of the TSPC D Flip-Flop is its ability to reduce power dissipation by eliminating unnecessary switching activities associated with multi-phase clocking. Additionally, the compact design makes it suitable for integration into modern VLSI circuits, where space and power are critical considerations. However, careful attention must be paid to process variations and transistor sizing to mitigate potential drawbacks such as leakage power and limited drive strength.

Overall, the implementation of the TSPC D Flip-Flop in Cadence Virtuoso demonstrates its significance in the field of digital design. By leveraging state-of-the-art EDA tools, engineers can refine the design to meet the demanding requirements of contemporary electronic systems, ensuring reliability and efficiency in real-world applications.

7. FREQUENTLY ASKED QUESTIONS (FAQs)

Q1. What is the main advantage of TSPC D Flip-Flop over conventional flip-flops?

Answer: The primary advantage is its single-phase clock operation, which simplifies the clocking network and reduces power consumption.

Q2. Why is Cadence Virtuoso used for designing TSPC D Flip-Flop?

Answer: Cadence Virtuoso provides a comprehensive design environment for schematic capture, layout design, and simulation, making it ideal for analyzing CMOS circuits.

Q3. How does TSPC D Flip-Flop achieve low power consumption?

Answer: It minimizes clock power by using only one clock phase, reducing switching activity and overall power dissipation.

Q4. What challenges are faced in the layout of TSPC D Flip-Flop?

Answer: Ensuring proper matching, minimizing parasitic effects, and maintaining signal integrity are key challenges in layout design.

Q5. Can TSPC D Flip-Flop be used in low-power applications?

Answer: Yes, its low power consumption makes it suitable for battery-operated and energy-efficient applications.